weir

OPERATING INSTRUCTIONS

LABORATORY POWER SUPPLIES
TYPES 4000 30V/1A, 4000 30V/2A

Telemeter Electronic
Posthof 4, D-8850 Donauwörth
Tel. 0906/4091, Twx 51856teldo
Fax 0906/21706, W. Germany

Telemeter Electronic
Posthof 4, D-8850 Donauwörth
Tel. 0906/4091, Twx 51856teldo
Fax 0906/21706, W. Germany

Weir Electronics Ltd.
Durban Road, Bognor Regis, Sussex, England.
Telephone: Bognor Regis (0243) 865991. Telex: 86543. Fax: (0243) 868613

Weir LABORATORY POWER SUPPLIES TYPES 4000 30V/1A, 4000 30V/2A

GENERAL

The type 4000 laboratory power supplies exploit the latest LSI semi-conductor technology to provide true constant voltage current operation with two precision digital meters each with a scale length of 4 digits for simultaneous monitoring of output voltage and current: separate high gain regulators are used for the voltage and current control modes and automatic crossover between modes is indicated by a front panel LED. Output ranges for the two different type 4000 units are 0–30V, 0–1A, and 0–30V, 0–2A with generous overrange capability to enable maximum settings to be easily achieved even under worst case conditions. So that voltage and current can both be set without disconnecting the load from the front panel terminals a front panel push button switch is used to interrupt the power supply output. A further push button switch provides a changeover from internal to external connection for the digital voltmeter input, for measurement of external voltages on the internal meter. The user is requested to read the operating instructions in this technical manual and particular attention is drawn to the section referring to safety which should be read carefully by operating and maintenance staff before attempting to use or service the power supply.

OPERATING INSTRUCTIONS

Upon receiving the power supply carefully remove the unit from its packing and inspect it to ensure that no transit damage has occurred. Provided that this inspection is satisfactory an appropriate line connector may now be fitted to the 3 core captive mains lead ensuring that the brown conductor is connected to live, the blue to neutral and the green/yellow to earth.

Fuse selection table – AC Line Fuse FSI ⚠

AC line volts	4000 30VIA	4000 30V2A
110/120	2A	4A
220/240	1A	2A

Δ Normally the unit will be set up at the factory for operation on 240V AC. The mains selector is internal and consists of a linked Molex connector with a polarising key mounted on a circuit panel above the transformer. The position of the polarising key shows clearly which of the four line voltages 110, 120, 220 or 240V is selected. The line fuse is mounted in a cradle type fuse holder on the same circuit panel. In order to inspect the fuse and voltage selector it is necessary to remove the cover. This is accomplished by removing the two screws from the ends of the handle and the two screws at each side. Ensure that the unit is not connected to the line supply before removing the cover. After ensuring that the correct line voltage is selected and the fuse is also correct replace the cover and connect the line supply. There is an indicator for line voltage setting on the rear panel consisting of a cover plate held in position by a central fixing screw. This plate may be rotated or reversed to show the appropriate line voltage. IT IS IMPERATIVE THAT THIS PANEL INDICATES THE CORRECT INTERNAL SETTING and therefore must be adjusted or checked each time the internal line voltage setting is adjusted or checked. The power supply is then ready for use. DO NOT UNDER ANY CIRCUMSTANCES OPERATE THE POWER SUPPLY WITHOUT FIRST ENSURING THAT THE EARTH CONNECTION IS CORRECTLY MADE.

The front panel layout is self explanatory, with voltage and current controls in separate distinctly marked groups. The upper push button switch is the DVM EXT/INT control. When latched 'IN' the DVM measures the output voltage of the power supply, when 'OUT' the positive input to the DVM is connected to the 4mm socket adjacent to the switch. This enabled voltages in the range zero to 39.99 volts to be measured on the DVM, where zero is the negative output terminal of the power supply. Since the output of the power supply is fully floating this negative terminal may be earthed, or at any other desired potential, provided it does not exceed 250V w.r.t. earth. The push button switch within the current group fulfils two important functions: 1) when 'OUT' it disconnects the positive front panel terminal. This enables safe output voltages to be set up without the need for disconnecting the load. 2) Also when 'OUT' the DCM output is connected directly to the current control enabling safe current limits, or safe output currents in the current control mode, to be set up without the need for disconnecting the load from the front panel terminals.

N.B. It is always advisable to switch the power supply ON when a load is connected *only* after ensuring that the output push button switch is 'OUT' and the DVM push button switch 'IN'.

⚠ These power supplies are fully protected for series or parallel operation, also they may be floated up to 250V with respect to earth. When using them in this way the front panel output terminals will be at hazardous potentials so must in no way be touched when energised. When making connections to the terminals for applications where the output terminals exceed 42V w.r.t. earth it is advised that all equipment in use is disconnected from mains and all other sources of high potentials.

Natural convection provides adequate cooling for these power supplies for normal laboratory bench applications up to the maximum ambient working temperature noted in the specification. It is recommended that airflow around the units is not restricted, particularly by placing other equipment or papers on top of the units, when they are operational.

CIRCUIT DESCRIPTION

General Principles

The block schematic Fig. 1 shows the principle of operation and the main elements of the power supply. The transformer has two secondary windings, one supplying the power supply output and the other, a centre tapped winding, is used to provide positive and negative low fixed voltages for internal use.

The series regulator transistor is connected in the negative output and controls current flowing into the output to maintain the output voltage constant so that the current fed back through the voltage control potentiometer balances the current produced by the reference voltage at the V amplifier input. However, when the output current increases to a value such that the voltage dropped across the current sense resistor produces an input to the I amplifier in excess of the input produced by the reference supply via the current control potentiometer then the power supply crosses over into the current control mode. A comparator connected to the V and I amplifier outputs turns the LED 'on' when in current control.

The +5V auxiliary supply is stabilised by a three terminal regulator, whereas the −5V supply which has a much lower load is zener stabilised. A further zener diode circuit is used to produce the internal negative reference voltage −V Ref which is used as the reference input for the voltage and current regulator amplifiers, and an inverting buffer amplifier produces a positive reference voltage +V Ref for the internal digital meters. An output switch disconnects the positive output terminal so that the output voltage can be set without disconnecting the load. This switch also controls the input selection circuit to the current meter. This meter measures the voltage dropped across the current sense resistor to display actual output current when the output is connected, or the voltage from the current setting control to set the current limit when the output is disconnected.

Detailed Circuit Description

Input and Transformer Circuits and Auxiliary Supplies

Switch SW1 is a double pole on/off switch through which line and neutral are connected to the transformer primary. FS1 is a protection fuse fitted between SW1 and the transformer in the line side. An 0.1 uF suppression capacitor is connected across the primary. The transformer primary is split into two windings with taps to enable various line voltages to be accommodated by simple linking.

The main secondary output which is approximately 36 volts RMS on full load is rectified by diode bridge D1 – D4 and smoothed by C1 giving raw DC of approximately 40 volts on full load.

The other secondary which is centre tapped and gives approximately 10 volts per side feeds diode bridge DB101 via protection fuses FS 101 and FS102. These fuses are fitted because an overload in this circuit does not generate sufficient primary current to rupture FS1. The positive output from the bridge is filtered by C103 and C102 and then regulated to +5V by three terminal regulator IC105. The negative output from the bridge is filtered by C104 and dropped to a stable −5.6V by R108 and zener diode D101 with further smoothing provided by C108. R132 provides a shunt discharge for C104.

Voltage Regulating Circuit. Fig. 2

The voltage regulating amplifier is one half of a dual operational amplifier IC1a. This drives the base of output Darlington TR1 (and TR2 for 30V 2A), via gating diode D10. Output voltage is sensed at the positive output terminal and fed back via the coarse and fine voltage controls to the positive input of IC1a. The stabilised −5V supply is further zener stabilised by D5 to give a highly stable reference supply of −2.45V which is fed via R9 into the same input. To set the maximum voltage that can be obtained with the fine and coarse voltage controls both fully clockwise a proportion (set by RV2) of the reference voltage is also connected to the summing point via R8. Vo is therefore forced to a value such that the current produced by it through the voltage control resistors exactly equals that produced by the reference voltage through R9 and RV2 and R8.

$$\frac{Vo}{RV5+RV6} = \frac{V\ Ref}{R9} + \frac{kV\ Ref}{R8}$$ where k is the effective setting of RV2

To ensure that the output is always zero when the voltage controls are set to zero a small offset voltage is produced by R4 and R3 and connected to the negative input of IC1a. D7 prevents the output of IC1a going more than slightly positive and C2 is fitted to provide compensation at H.F. The positive input of IC1a is protected from large excursions by R31 and back to back diodes D6, D8. C3 and R15 provide low frequency stabilisation of the voltage regulating loop.

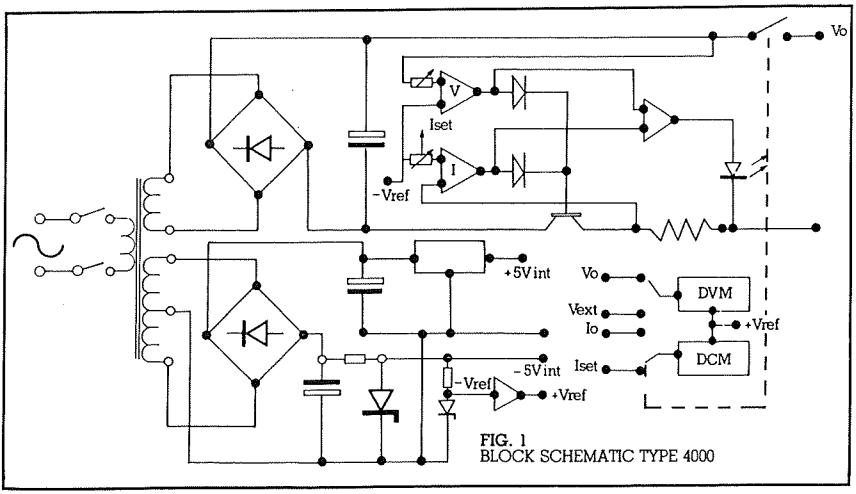

FIG. 1
BLOCK SCHEMATIC TYPE 4000

Current Regulating Circuit Fig. 3.
The current control potentiometer is fed by a stable negative voltage derived from reference zener diode D5 via resistor network R6, RV1 and R5. The wiper voltage from the current potentiometer is then fed via R12 into the positive input of IC2a thus ensuring that the output of this amplifier is negative, so that D11 is non-conducting and the power supply is under voltage control. R10 provides loading for the current control potentiometer to improve the resolution at low settings, whilst R11 and C6 improve output current ripple. When the current through output series resistor R27 rises the voltage fed back via R13 into the negative input of IC2a also goes up. When this rises to a value high enough to overcome the effect of the current setting potentiometer the output of IC2a will go positive tending to turn off the series regulator, thus limiting the output current to a value where the voltage across R27 equals the voltage at the wiper of the current control potentiometer (because R12 equals R13). The power supply is then under current control.
RV3, which is symmetrically connected across −V Reg and +V Reg via resistive attenuators (R18, R19 and R25, R20), provides null control to IC2a via R14. C4 is fitted for H.F. compensation.

Reference Buffer and Current Limit Comparator
The negative reference voltage is inverted in IC2b to provide a buffered positive reference voltage +V Ref for use in the measurement circuits.
IC1b is connected as a comparator with the positive input driven from the current control amplifier IC2a and the negative input driven from the voltage control amplifier IC1a. Thus under voltage control the output of IC1b is forced negative resulting in no current through the LED and under current control the output is forced positive (by the positive output of IC2a) causing current to flow in the LED, thus illuminating it. R17 limits the LED current.

Measuring Circuits
Both meters are digital voltmeters using virtually identical circuits. The principle of operation is that a reference voltage across the C equals the voltage to be measured. This is implemented by a comparator driving a flip flop which in turn drives a switch. Therefore the duty cycle of the flip flop will be proportional to Vin. Pulses produced by an internal clock are accumulated in a counter during this duty cycle and the counter output displayed, the displayed number is then proportional to the input voltage, and with suitable scaling is equal to it.
IC101 and IC103 are the DVM circuits (N.S. ADD 3701) and IC102 and IC104 are LED digital display buffers.
Power for the measuring circuits comes from the +5V three terminal regulator IC105 and the OV is the power supply negative Output terminal.

Voltage Measuring Circuit
Input to the digital voltmeter is selected by SW3 to be either the power supply positive output or the external input socket. IN EACH CASE MEASUREMENT IS SINGLE ENDED AND IS WITH RESPECT TO POWER SUPPLY NEGATIVE OUTPUT TERMINAL.
The functions of the components external to the DVM integrated circuit IC101 are as follows:–
R101 Input resistance.
R105, R103, and RV104 Input attenuator and input scaling.
RV102 and R104 Offset control.
R107 and C105 Internal clock frequency setting.
R106 and C106 Feedback RC network.
C109 Filter capacitor.
C107 Provides decoupling.

The segments and decimal point are driven directly from IC101 through resistors R110 to R117, and the digits are buffered by IC102.

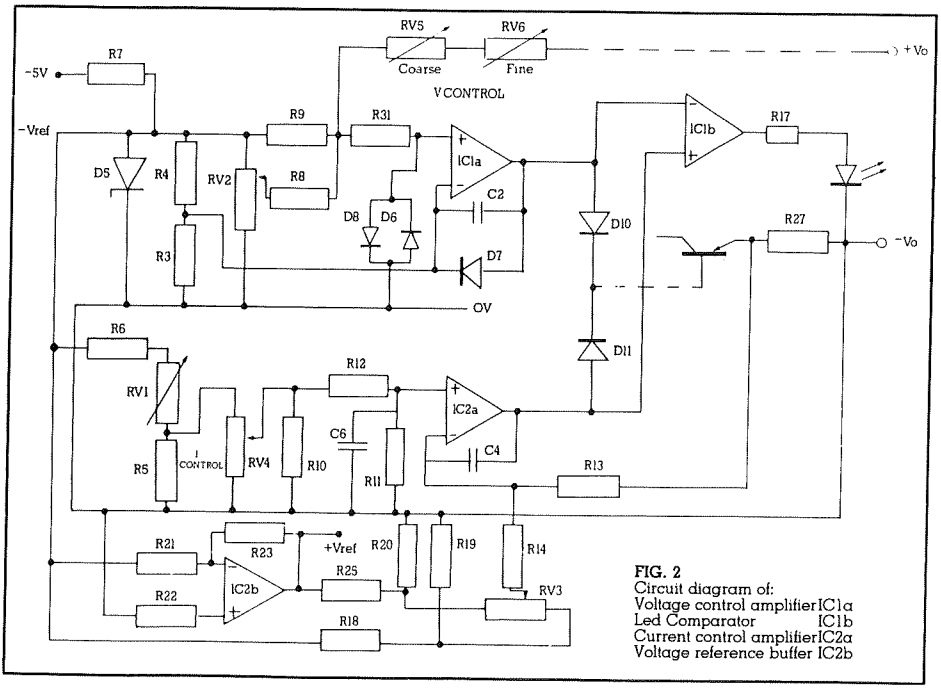

FIG. 2
Circuit diagram of:
Voltage control amplifier IC1a
Led Comparator IC1b
Current control amplifier IC2a
Voltage reference buffer IC2b

Current Measuring Circuit Fig. 3.
Input to the digital current meter (DCM) is selected by the quad analogue switch IC3 and the position of the output switch SW2. Note that IC3 is connected between OV and −5V.
When SW2 disconnects the output of the power supply from the output terminal, R30 is connected to +Vo and the junction of R30 and D13 goes positive. This provides a +ve control signal to IC3a and IC3c which switches them to 'CONDUCT'. When IC3a conducts the junction of R1 and IC3a goes towards −5V which switches IC3b and IC3d to 'NON-CONDUCT'. In this mode IC3c connects the wiper of the current setting potentiometer to the input of the DCM and IC3d isolates the current monitor line (one side of R27) from this input. Conversely when SW1 is in the alternative state the junction of R30 and D13 is pulled down to the −5V line by R2, turning IC3a and IC3c to 'NON-CONDUCT'. The control inputs of IC3b and IC3d then go to OV and they revert to the 'CONDUCT' state. The output current monitor line is then connected to the DCM input by IC3d whereas IC3c isolates the wiper of the current potentiometer.
The functions of the components external to the DVM integrated circuit IC103 are as follows:
R118, R113 input resistance.
C115 input smoothing so that rapid current fluctuations are not registered on the DCM.
RV103, R120 Offset control.
R122, C110 Internal clock frequency setting.
RV101, R121, C111 Feedback RC network (RV101 adjusts meter scaling).
C114, C112 Decoupling capacitors.

Power Supply Output Circuits
TR1 and TR2, the output series regulators are Darlingtons; TR1 only is fitted for the Type 4000 30V 1A unit and both for the 30V 2A version. R28 and R29 are current sharing resistors and are only fitted in the 30V 2A unit. C5, the output bucket capacitor keeps the output impedance low at high frequencies thereby improving transient response. This capacitor is protected by diode D14 against possible reverse voltages. R26 provides an internal bleed load when there is no output load and when SW2 is used to switch off the output load, D9 is a catching diode to provide a 'sense' connection during SW2 changeovers.
The series regulator(s) are protected by diode D12 against damage which can arise from reverse base emitter voltages when connecting the power unit to an external parallel source (for battery charging or connecting two supplies in parallel for example).

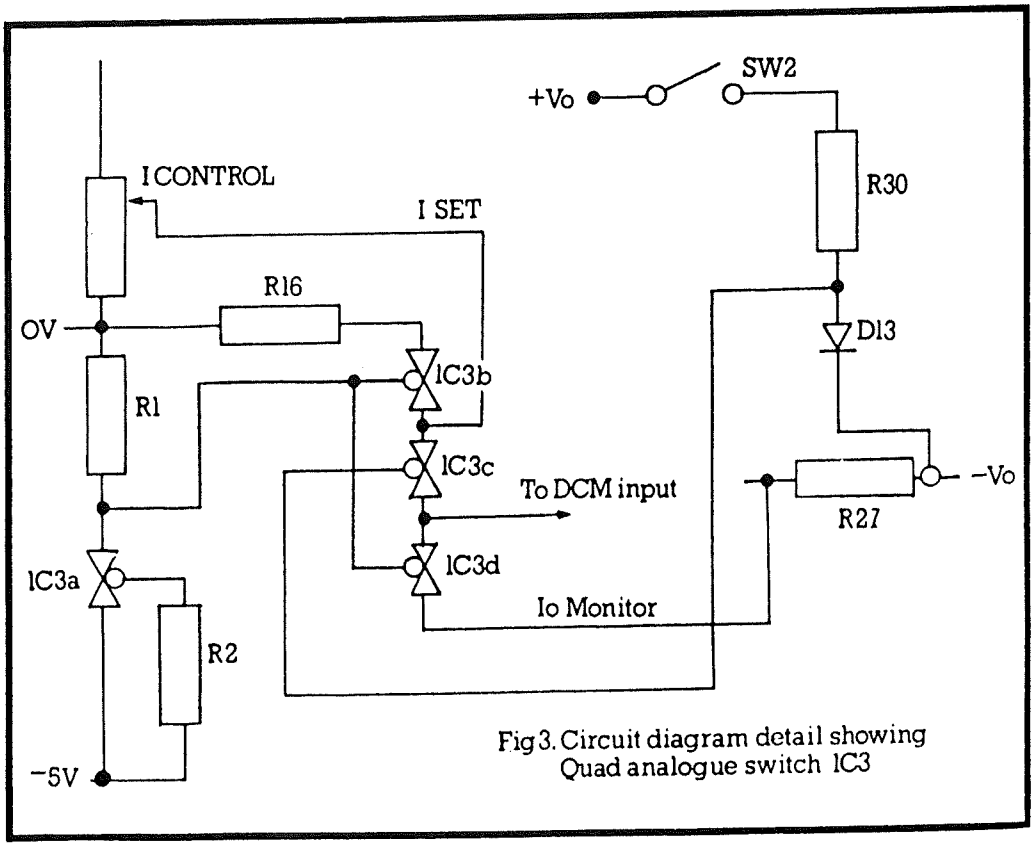

Fig 3. Circuit diagram detail showing Quad analogue switch IC3

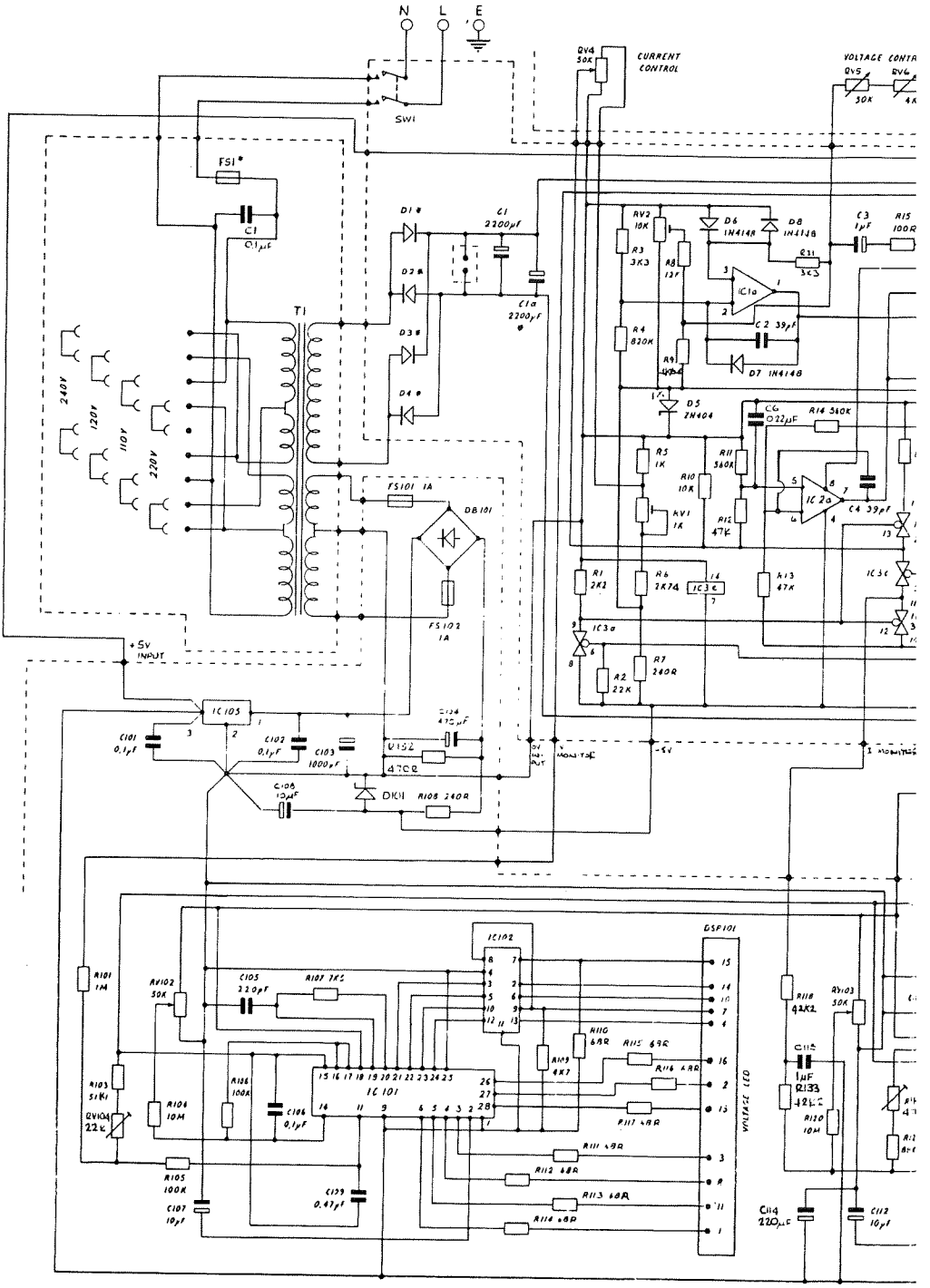
N
L
E
SW1
FS1*
C1
0.1µF
T1
240V
120V
110V
220V
D1*
D2*
D3*
D4*
C1
2200µF
C1a
2200µF
FS101 1A
DB101
FS102
1A
+5V
INPUT
IC105
C101
0.1µF
C102
0.1µF
C103
1000µF
C104
470µF
R152
470R
C108
10µF
D101
R108 240R
CURRENT
CONTROL
RV4
50K
RV2
10K
R3
3K3
R8
13K
R4
820K
R9
D6
1N4148
D8
1N4148
R31
3K3
IC1a
C2 39pF
D7 1N4148
D5
2N404
C6
0.22µF
R14 560K
R5
1K
R11
560K
R10
10K
RV1
1K
R12
47K
IC2a
C4 39pF
R1
2K2
R6
2K7a
IC3c
R13
47K
IC3a
R2
22K
R7
240R
C3
1pF
R15
100R
VOLTAGE CONTR
RV5
50K
RV6
4K
MONITOR
-5V
IC102
IC101
GSF101
VOLTAGE LED
R101
1M
RV102
50K
C105
220pF
R107 7K5
R103
51K1
RV104
22K
R104
10M
R106
100K
C106
0.1pF
R105
100K
C107
10pF
C109
0.47pF
R109
4K7
R110
68R
R115 68R
R116 68R
R117 68R
R111 68R
R112 68R
R113 68R
R114 68R
R118
47K2
RV103
50K
C113
1µF
R133
47K2
R120
10M
C114
220µF
C112
10pF

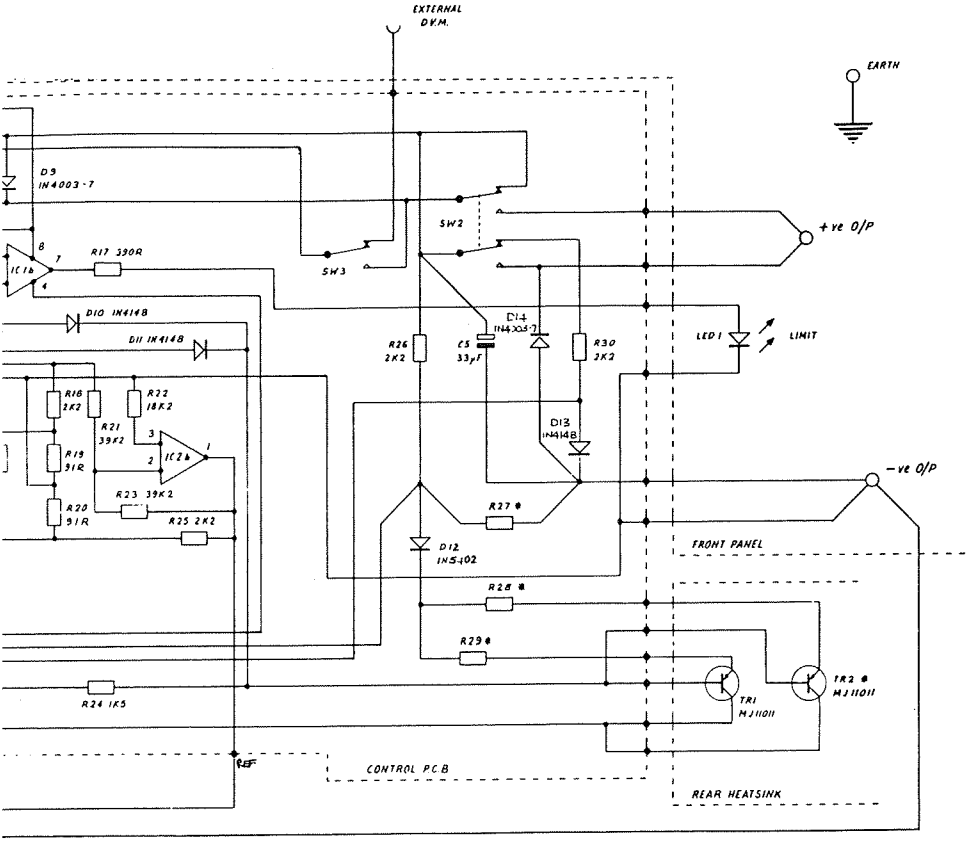

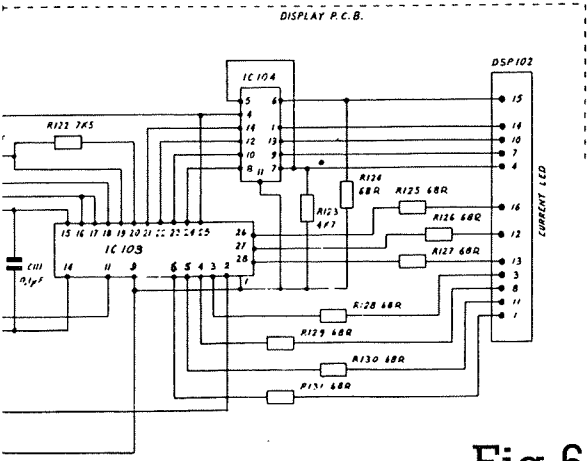

CCT. REF.	1 AMP	2 AMP	CCT. REF.	1 AMP	2 AMP
R5	1K	3K92			
R28	—	1R2			
R29	LINK	1R2	FS1	1AMP	2 AMP
C1	—	2200μF	TR2	—	MJ11011
D1	IN4003-7	IN5403-7			
D2	IN4003-7	IN5403-7			
D3	IN4003-7	IN5403-7			
D4	IN4003-7	IN5403-7			

Fig 6. Circuit diagram

SETTING UP PROCEDURE

Dismantling

Fault finding, repair and recalibration work should only be carried out by personnel who are qualified and competent to work on precision electronic circuits. Otherwise it is advised that the unit is returned to Weir Electronics or an appointed distributor or agent for this work to be undertaken.

Only suitably skilled personnel who are fully aware of the hazards of working with AC line powered equipment must be allowed to dismantle the unit. When dismantling or rebuilding, the unit must be disconnected from the line power source and only reconnected when absolutely essential for fault isolation, carrying out electrical adjustments and retest.

Removing the cover is described under section 2 of this handbook. This then gives good access to AC line selector, line fuse, transformer connections and the track side of the two main printed circuit boards. The front panel can be folded down (Fig. 4), without disturbing any connections by removing the following screws:–

2 front feet and the central screw between them.

2 rear screws fixing PCB's to rear panel (bottom rear for left hand PCB and top rear for right hand PCB).

If better access to the front panel or PCB components is required then the other four screws retaining the PCB's (two at each front edge), can be removed and the PCB's then splayed as shown in Fig. 5.

Fig 4. Front panel assembly tilted forwards

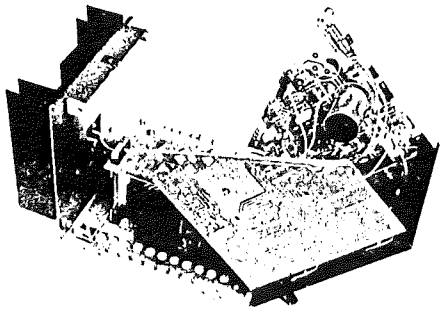

Calibration

The test equipment required is a 4½ digit digital multimeter with accuracy at least as good as:

0.05% of reading ±1 L.S.D. on voltage ranges.

0.1% of reading ±2 L.S.D. on current ranges.

And a precision load box accurate to 0.05%.

Setting up the power supply is then carried out as follows:–

Calibrate Internal DVM

Turn coarse voltage control anticlockwise to minimum.

Adjust fine voltage control to obtain 0.02V at the output measured by the external DMM.

Adjust RV102 to obtain 0.02V on DVM.

Turn output voltage to maximum (coarse and fine controls both fully clockwise).

Adjust RV104 to obtain the same reading on the DVM as registered on the DMM.

Check Maximum Output Voltage from Power Supply

Turn fine and coarse voltage controls fully clockwise and check that the output voltage is 31 volts (approximately), if not adjust RV2 until it is.

Calibrate Internal DCM

With the output voltage set to 30.00V connect the load box across the output terminals. Set the load box to 15kΩ and adjust RV103 until the DCM reads .002A. Connect the DMM across the output and select the 2A range then adjust the current control to obtain a reading of approximately 1A on the DMM. Adjust RV101 to obtain exactly the same reading on the internal DCM.

Set Maximum Current Output

With the current control set to a maximum (fully clockwise), adjust RV1 to give an output current of 1.100 ± .010A or 2.2 ± .020A depending on whether the unit is 4000 30V 1A or 4000 30V 2A.

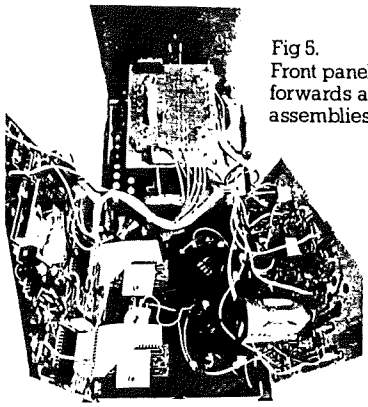

Fig 5.
Front panel tilted forwards and PCB assemblies splayed

SPECIFICATIONS

Line Supply:	110, 120, 220, 240V ± 10% 48–63 Hz.

Voltage Mode

Line regulation:	≤ ±0.01% for ± 10% line voltage change.
Load regulation:	< 0.05% for 100% load change.
Ripple & Noise:	< 2mV peak to peak.
Output Impedance:	< 10mΩ at 1 kHz.
Temperature Co-efficient:	< 0.01%/°C typically.
Transient Response:	recovers to < 50mV of setting within 30μ secs after full load step change.
Transient Excursion:	±0.5V maximum for full load step change.

Note:
All voltage mode specifications apply when the output voltage is set to maximum.

Current Mode

Variation of output current:	< ±0.1% for ±10% line voltage change.
Variation of output current:	< ±1mA for 0–30V output voltage change.
Output resistance:	> 30kΩ when voltage control is set to maximum.
Current ripple:	< 1mA pk – pk.

Note:
All current mode specifications apply when output current is set to a maximum, and voltage control is set to a maximum.

Voltmeter

Display:	12.5mm LED 4 digit.
Range:	0 to 39.99 volts.
Accuracy:	±0.1% of reading ±2 L.S.D. AT 23°C.
Conversion Rate:	4 per second approximately.
Input Impedance:	≥ 1MΩ.

Input Protection:
No damage will result by inadvertent connection to 240V AC line voltage.

Voltage Measurement:
External measurement of voltages is possible in the range 0 to 39.99 volts positive with respect to power supply 'negative' output terminal.

Current Meter

Display:	12.5mm LED 4 digit.
Range:	0 to 3.999 Amps.
Accuracy:	±0.2% of reading ±4 L.S.D. at 23°C.
Conversion Rate:	4 per second approximately.

General

Operating temperature range:	0° to 45°C.
Storage temperature range:	–10°C to 80°C.

Output Isolation:
Output may be operated up to 250V with respect to chassis.

Output Protection:
External reverse voltages will not cause damage provided current generated does not exceed half full load current.

RFI:
BS800.

Applicable Safety Standard:
These units have been designed to conform to the relevant provisions of IEC 348.

Dimensions and Weight (approx):

	H	W	D	WT
30V 1A	180 ×	153 ×	240mm	4.4kg
30V 2A	180 ×	153 ×	260mm	4.7kg

PARTS LIST

4000 30V 1A CONTROL PCB

Cct Ref	Weir Part No.	Description
R1	026220	RES CAR FILM 2k2 0.25W 5%
R2	027100	RES CAR FILM 22k0 0.25W 5%
R3	026260	RES CAR FILM 3k3 0.25W 5%
R4	030082	RES CAR FILM 820k 0.25W 5%
R5	015502	RES MET FILM 1k0 0.25W 1%
R6	015288	RES MET FILM 2k74 0.25W 1%
R7	026119	RES CAR FILM 240R 0.25W 5%
R10	014255	RES MET FILM 10k0 0.25W 1%
R8	027070	RES CAR FILM 12k0 0.25W 5%
R9	014243	RES MET FILM 4k64 0.25W 1%
R11	030073	RES CAR FILM 560k0 0.25W 5%
R12	027130	RES CAR FILM 47k0 0.25W 5%
R14	030073	RES CAR FILM 560k0 0.25W 5%
R16	030031	RES CAR FILM 82k0 0.25W 5%
R13	027130	RES CAR FILM 47k0 0.25W 5%
R18	026220	RES CAR FILM 2k2 0.25W 5%
R19	026071	RES CAR FILM 91R 0.25W 5%
R20	026071	
R21	033022	RES MET FILM 39k2 0.25W 1%
R15	026090	RES CAR FILM 100R 0.25W 5%
R17	026143	RES CAR FILM 390R 0.25W 5%
R22	168271	RES MET FILM 18k2 0.25W 1%
R23	033022	RES MET FILM 39k2 0.25W 1%
R25	026220	RES CAR FILM 2k2 0.25W 5%
R24	026205	RES CAR FILM 1k5 0.25W 5%
R26	029210	RES CAR FILM 2k2 0.5W 5%
R30	029210	
R27	024040	RES GEN PUR 0R47 2.5W 5%
R28	040189	RES W W 1R2 2W 10%
R29	040189	
R31	026260	RES CAR FILM 3k3 0.25W 5%
R33	004270	RES MET OX 4k7 0.5W 2%
RV2	075280	POT TRIM CAR 1 TRN 10k0 0.15W 20%
RV1	074184	POT TRIM CER 1 TRN 1k0 0.5W 10%
RV3	075280	POT TRIM CAR 1 TRN 10k0 0.15W 20%
IC1	064013	INT CCT OP AMP DUAL 5–30V DIL 8PL
IC2	064013	
IC3	065122	INT CCT MOS QUAD ANALOG 5W DIL 14P
D1	069125	DIODE SI 600V 1A D015
D2	069125	
D3	069125	
D4	069125	
D5	069035	DIODE ZEN REF 2.45V 0.3W 3%
D6	069130	DIODE SI 75V 75mA D035
D7	069130	
D8	069130	
D10	069130	
D11	069130	
D9	069125	DIODE SI 600V 1A D015
D13	069130	DIODE SI 75V 75mA
D12	066068	DIODE SI 800V 3A
D14	069125	DIODE SI 600V 1A D015
C1	057064	CAP ALUM ELECT 2200μF 63V −10 +50%
C2	042151	CAP CER 39pF 63V 2%
C4	042151	
C3	051219	CAP ALUM ELECT 1μF 63V 20%
C5	051229	CAP ALUM ELECT 33μF 50V 20%
C6	048240	CAP FILM 0.22μF 100V 10%
D15	069130	DIODE SI 75V 75mA D035
C7	044214	CAP FILM 0.1μF 250V 10%
R32	001000	RES MET OX 100R 0.25W 5%
D16	068001	DIODE ZENER 6.2V 0.4W 5%
C8	044089	CAP FILM 820pF 160V 2.5%
C9	042051	CAP CER 39pF 100V
C10	047105	CAP MET FILM 0.1μF 63V 10%

4000 30V 2A CONTROL PCB

If not listed, components are as per 4000 30V 1A

Cct Ref	Weir Part No.	Description
D1	066068	DIODE SI 800V 3A
D2	066068	
D3	066068	
D4	066068	

DISPLAY PCB MODEL 4000

Cct Ref	Weir Part No.	Description
R101	011150	RES MET OX 1MR 0.5W 1%
R103	033199	RES MET FILM 51k1 0.25W 1%
R104	018058	RES CAR FILM 10MR 0.5W 20%
R105	027160	RES CAR FILM 100KR 0.25W 5%
R106	027160	
R107	029251	RES CAR FILM 7kS 0.25W 5%
R108	026100	RES CAR FILM 150R 0.25W 5%
R109	027020	RES CAR FILM 4k7 0.25W 5%
R110	026070	RES CAR FILM 68R 0.25W 5%
R111	026070	
R112	026070	
R113	026070	
R114	026070	
R115	026070	
R116	026070	
R117	026070	
R118	014835	RES MET FILM 42k2 0.25W 1%
R120	018058	RES CAR FILM 10MR 0.5W 20%
R121	033193	RES MET FILM 88k7 0.25W 1%
R122	029251	RES CAR FILM 7k5 0.25W 5%
R123	027020	RES CAR FILM 4k7 0.25W 5%
R124	026070	RES CAR FILM 68R 0.25W 5%
R125	026070	
R126	026070	
R127	026070	
R128	026070	
R129	026070	
R130	026070	
R131	026070	
RV101	076143	POT TRIM CER 1 TRN 50kR 0.5W 10%
RV102	076140	POT TRIM CAR 1 TRN 47kR 0.15W 20%
RV103	076140	
RV104	076124	POT TRIM CER 1 TRN 20kR 0.5W 10%
IC101	065059	INT CCT TTL 3.75 DIG DVM 28 PIN
IC102	064260	INT CCT MISC
IC103	065059	INT CCT TTL 3.75 DIG DVM 28 PIN
IC104	064260	INT CCT MISC
IC105	064289	INT CCT REG 5V
D101	066242	DIODE ZENER 6.8V 0.4W 5%
DB101	069125	DIODE SI 600V 1A D015
C101	047140	CAP FILM 0.1μF 100V 10%
C102	047140	
C103	051048	CAP ALUM ELECT 1000μF 16V 20%
C104	051265	CAP ALUM ELECT 470μF 16V 20%
C105	042097	CAP CER 220 pF 100V 10%
C106	047140	CAP FILM 0.1μF 100V 10%
C107	051122	CAP ALUM ELECT 10μF 50V 20%
C108	051223	CAP ALUM ELECT 10μF 50V 20%
C109	049270	CAP FILM 0.47μF 100V 10%
C110	042097	CAP CER 220pF 100V 10%
C111	047140	CAP FILM 0.1μF 100V 10%
C112	051122	CAP ALUM ELECT 10μF 50V 20%
DSP101	067176	DIGITAL DISPLAY 7 SEG 4 DIG
DSP102		
C114	051036	CAP ALUM ELECT 220μF 16V 20%
C115	651120	CAP FILM 1μF 100V 10%
R132	029096	RES CAR FILM 470R 0.5W 5%
R133	014835	RES MET FILM 42k2 0.25W 1%
C116	045245	CAP CER 0.022μF 63V −20 +80%
C117	045245	

SAFETY REGULATIONS (IEC 348)

IEC Clause

63 1. The apparatus described in this manual is safety class 1 (IEC classification). Accessible metal parts which are connected to the protective earth terminal indirectly are:– The cover and the heat sink.

64.1 2. The apparatus has been designed and type tested according to IEC Publication 348. Safety Requirements for Electronic Measuring Apparatus, and has been supplied in a safe condition. The present instruction manual contains information and warnings which shall be followed by the user to ensure safe operation and to retain the apparatus in safe condition.

64.2 (a) 3. If the unit is to be connected to the main supply by fixed wiring, rather than via a mains plug, then the protective earth wire in the 3-core mains lead shall be connected to a protective conductor before any other connection is made.

64.3 (a) 4. Before switching on the apparatus, make sure that it is set to the voltage of the mains supply.

64.3 (c) 5. Ensure that an appropriate mains plug is correctly connected to the captive 3-core cable provided with the unit. Connections are:– brown = live, green/yellow = earth and blue = neutral. Then ensure that the mains socket to be used has a correctly connected protective earth contact. Do not use extension cords without protective earth conductors.

64.3 (a) 6 (a). If the unit is to be used with live measuring or load circuits which have protective earth terminals, ensure that all protective earth terminals are connected to a protective conductor (the front panel green terminal may be used for this purpose) prior to switching on.

64.3 (e) 6 (b). If the unit is to be used with live measuring or load circuits which do not have protective earth terminals, ensure that the unit mains plug is inserted before making connections between the unit output terminals and such circuits.

64.4 (a) 7. **WARNING**
(A) Any interruption of the protective conductor inside or outside the unit, or disconnection of the protective earth connection, is likely to render the apparatus dangerous. Intentional interruption is prohibited.

64.4 (b) (b) The output of the power supply unit is fully floating and it may be used in series with other power supply units to generate high DC voltages up to 300V DC.
Such voltages are exceedingly hazardous and great care should be taken to shield the output terminals for such use. On no account should the output terminals be touched when the unit is switched on under such use. All connections to the terminals must be made with the power switched off.

64.5 (a) 8 (a). Ensure that the unit is disconnected from the mains supply (switching off the unit by the front panel ON/OFF switch is not sufficient) before the cover is removed for the purposes of maintenance or setting up – otherwise dangerous voltages are accessible.
Unless unavoidable, do not reconnect the unit to the mains supply until the repair is complete and the cover replaced.
It is recognised that, for fault finding and setting up, the mains supply will require reconnection and the unit will be switched on – thus, this work may only be carried out by a skilled person who is aware of the hazard involved. When this work is completed, disconnect the mains supply before replacing the cover.

64.5 (b) (b) Capacitors inside the apparatus (especially C2 and C8 on the 423 or C2 and C13 on the 423D) may remain charged to a voltage >42V (IEC extra-low voltage for safety) after removal of the mains power. These should be discharged before commencing repair work.

64.5 (c) (c) Use only the correctly rated fuses as specified in the parts list for replacement. On no account use mended fuses or short circuited fuse holders.

64.6 9. If the apparatus is defective or if it has ben subjected to abnormal mechanical stresses, it is likely that the safety protection maybe impaired, in which case, the unit should be withdrawn from use and returned to the factory for recheck and repair.
This is particularly important if there are external signs of mechanical damage.

Weir Electronics Ltd.
Durban Road, Bognor Regis, Sussex, England, PO22 9RW
Telephone: Bognor Regis (0243) 865991. Telex: 86543
Fax: (0243) 868613

Iss. A. JAN. 88